Diepa®

ELEVATOR ROPES

PAVLÍNEK
VÁZACÍ PROSTŘEDKY
EMAIL: OBCHOD@PAVLINEK.CZ
TEL: +420 595 693 911
ŠALOUNOVA 746/31, OSTRAVA VÍTKOVICE
IČ: 25358511 DIČ: CZ25358511

Modulus of elasticity of DIEPA elevator ropes

Rope type	Modulus of Elasticity **[N/mm²]**
DIEPA **A 160 S**	110000
DIEPA **A 160**	114000
DIEPA **A 190 S**	110000
DIEPA **S 819 P**	108000
DIEPA **A 139**	110000

The modulus of elasticity of the single DIEPA rope constructions has been examined by many elongation tests of various rope diameters. The above mentioned values represent average values.

Calculation of elastic elongation

$$\text{Elastic Elongation [mm]} = \frac{\text{Length [mm]} \cdot \text{Load [N]}}{\text{Modulus of Elasticity [N/mm}^2\text{]} \cdot \text{Metall. Cross Section Area [mm}^2\text{]}}$$

PAVLÍNEK
VÁZACÍ PROSTŘEDKY
EMAIL: OBCHOD@PAVLINEK.CZ
TEL: +420 595 693 911
ŠALOUNOVA 746/31, OSTRAVA VÍTKOVICE
IČ: 25358511 DIČ: CZ25358511

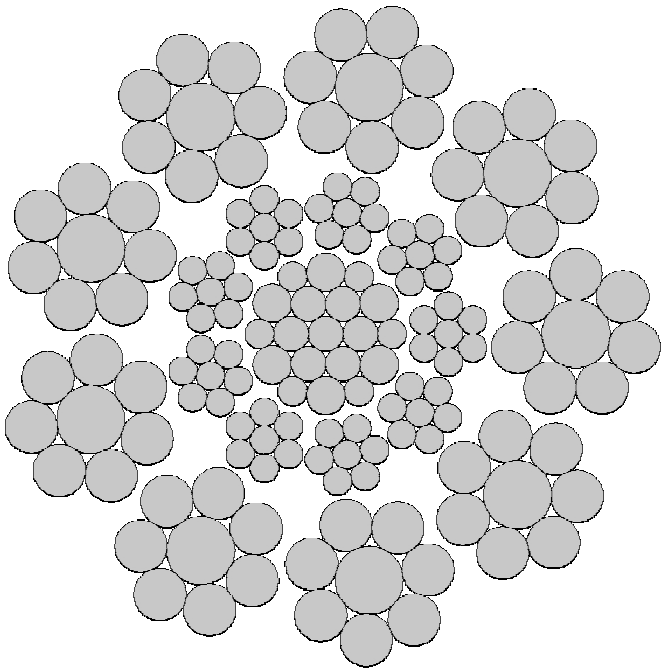

DIEPA **A 160 S** / **A 190 S**

Non-rotation resistant special wire rope
in Lang's lay construction

DIEPA A 160 S is highly suitable for:

regular traction sheaves

DIEPA A 190 S is highly suitable for:

hardened traction sheaves

Filling factor:	0,6334
Spinning factor:	0,8400
Total number of wires:	145
Number of load bearing wires in the outer strands:	72

DIEPA			A 160 S				A 190 S			
Diameter	Metall. Cross Section	Weight	1370 / 1770 N/mm²				1770 N/mm²			
			Calculated breaking load		Minimum breaking load		Calculated breaking load		Minimum breaking load	
mm	mm²	kg/100m	kN	kp	kN	kp	kN	kp	kN	kp
8	31,9	29	47,6	4850	39,7	4050	54,4	5550	45,6	4650
9	40,3	36	58,9	6000	49,1	5000	68,7	7000	57,4	5850
10	49,9	45	74,6	7600	62,3	6350	85,3	8700	71,6	7300
11	60,3	54	88,3	9000	74,1	7550	103	10500	86,3	8800
12	71,6	64	107	10900	89,8	9150	122	12450	103	10450
13	84,2	76	121	12300	101	10300	144	14700	121	12300
14	98,1	88	146	14850	122	12450	168	17100	141	14350
15	112,5	101	166	16950	139	14200	192	19600	161	16450
16	127,8	115	186	19000	156	15950	219	22300	183	18700
17	143,8	129	209	21300	175	17850	246	25100	207	21050
18	161,9	146	235	24000	198	20150	277	28250	232	23700
20	199,6	180	290	29550	243	24800	342	34850	287	29250
22	243,1	219	350	35700	294	29950	417	42500	350	35700
24	289,5	261	417	42550	350	35700	496	50550	416	42450

Maximum allowable tolerance of the rope diameter +2%

DIEPA **A 160 S** and DIEPA **A 190 S** are normally produced in righthanded lay, bright wire and with lubrication.
Lefthanded and galvanized ropes will be manufactured upon special request.

Of course the production of ropes with diameters not listed in the tables above is possible.

PAVLÍNEK
VÁZACÍ PROSTŘEDKY
EMAIL: OBCHOD@PAVLINEK.CZ
TEL: +420 595 693 911
ŠALOUNOVA 746/31, OSTRAVA VÍTKOVICE
IČ: 25358511 DIČ: CZ25358511

The ropes in Lang's lay DIEPA A 160 S and DIEPA A 190 S are employed

on elevators driven by grooved traction sheaves with single wrap, 1:1 roping

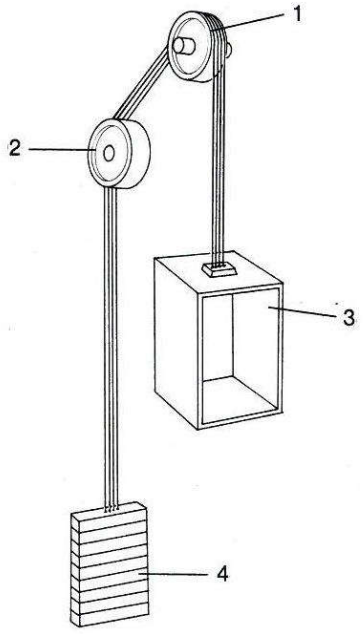

1 traction sheave
2 guiding sheave
3 car
4 counterweight

on elevators driven by grooved traction sheaves with single wrap, 2:1 roping

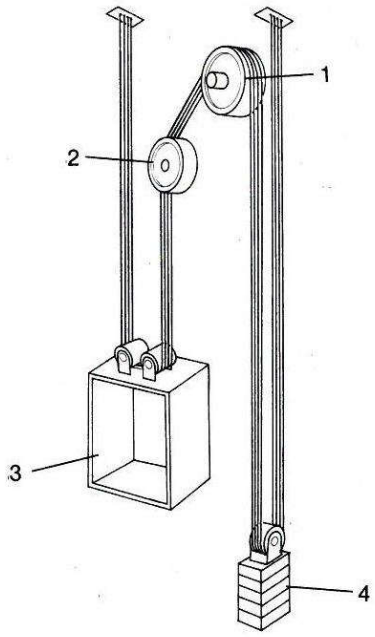

DIEPA **A 160 S** and DIEPA **A 190 S** are equally effective on sheave-driven elevators with single wrap, 3:1 roping, as well as on elevators driven by transversely mounted engines.

Profiles of grooved traction sheaves made of regular or hardened grey cast iron

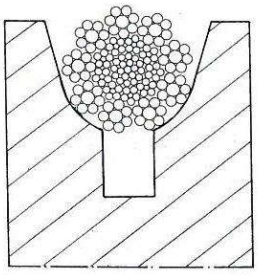

Undercut "U"

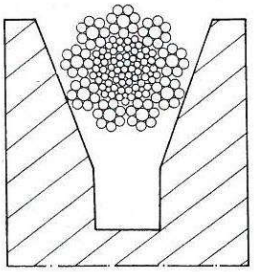

Undercut "V"

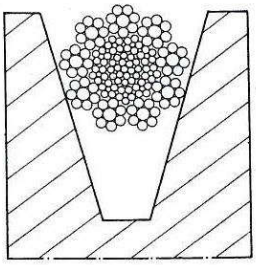

"V"

PAVLÍNEK
VÁZACÍ PROSTŘEDKY
EMAIL: OBCHOD@PAVLINEK.CZ
TEL: +420 595 693 911
ŠALOUNOVA 746/31, OSTRAVA VÍTKOVICE
IČ: 25358511 DIČ: CZ25358511

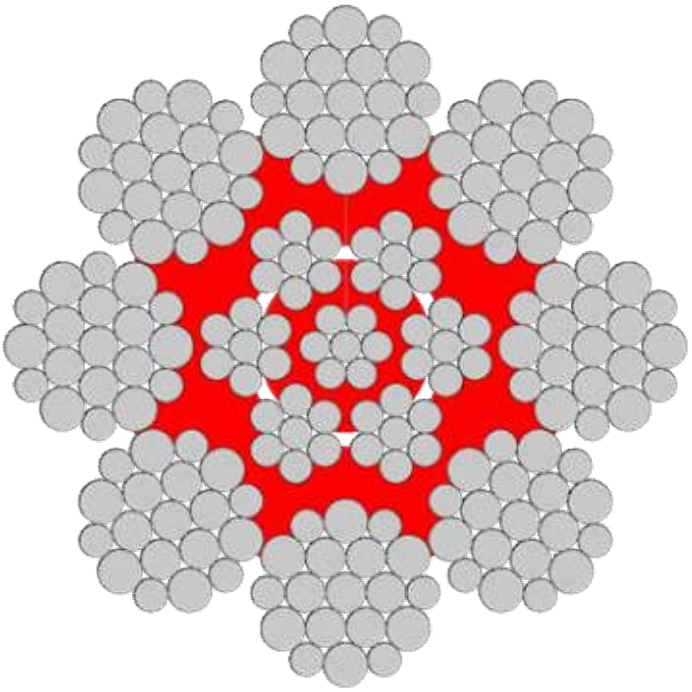

DIEPA **S 819 P**

Non-rotation resistant special wire rope
in ordinary lay with thermoplastic fill

DIEPA S 819 P is suitable for:

elavators with twin sheaves

drum driven elevators

Filling factor:	0,6130
Spinning factor:	0,8450
Total number of wires:	201
Number of load bearing wires in the outer strands:	152

DIEPA **S 819 P**

Diameter	Metall. Cross Section	Weight	Calculated breaking load				Minimum breaking load			
			1570 N/mm²		1770 N/mm²		1570 N/mm²		1770 N/mm²	
mm	mm²	kg/100m	kN	kp	kN	kp	kN	kp	kN	kp
8	30,0	28	47,1	4800	53,0	5400	39,7	4050	44,6	4550
9	38,6	36	60,3	6150	67,7	6900	50,5	5150	56,9	5800
10	47,2	43	74,1	7550	82,9	8450	62,3	6350	69,7	7100
11	58,2	54	91,2	9300	103	10450	77,0	7890	86,3	8800
12	68,9	63	108	11000	122	12400	90,7	9250	103	10450
13	80,5	74	126	12850	142	14450	106	10850	120	12200
14	93,1	86	146	14850	164	16750	123	12500	139	14150
15	110,3	101	173	17600	195	19850	146	14850	164	16750
16	124,3	114	195	19850	219	22350	164	16750	185	18850
17	140,7	129	221	22500	248	25300	186	19000	209	21350
18	156,7	144	246	25050	277	28200	207	21150	233	23800
19	173,7	160	272	27750	307	31250	230	23400	259	26400
20	194,5	179	305	31100	343	35000	258	26250	290	29550
21	215,5	198	338	34450	380	38750	285	29100	321	32700
22	235,1	216	369	37600	415	42300	311	31750	350	35700
23	255,6	235	401	40850	451	46000	338	34500	381	38850
24	279,8	257	439	44750	494	50350	371	37800	417	42500

Maximum allowable tolerance of the rope diameter +2%

DIEPA **S 819 P** is normally produced in righthanded lay, bright wire and with lubrication.
Lefthanded and galvanized ropes will be manufactured upon special request.

Of course the production of ropes with diameters not listed in the table above is possible.

PAVLÍNEK
VÁZACÍ PROSTŘEDKY
EMAIL: OBCHOD@PAVLINEK.CZ
TEL: +420 595 693 911
ŠALOUNOVA 746/31, OSTRAVA VÍTKOVICE
IČ: 25358511 DIČ: CZ25358511

Application of the ordinary lay rope
DIEPA S 819 P

Elevators with twin sheaves

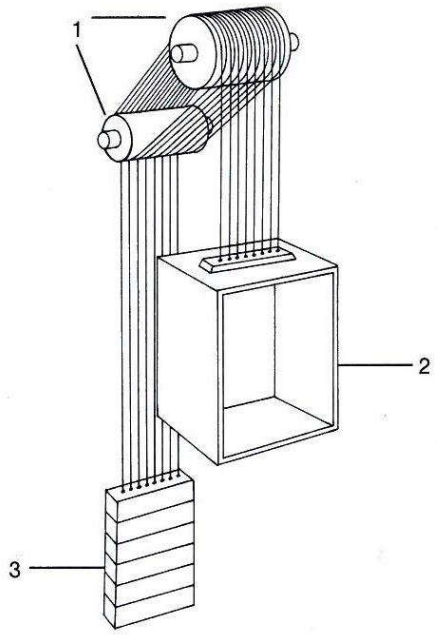

1 driving twin sheaves with double wrap
2 car
3 counterweight

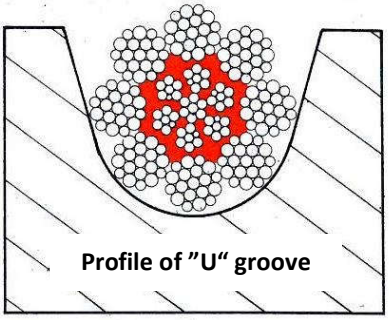

DIEPA **S 819 P** achieves its best longevity on full "U" grooved traction sheaves , as normally used on

elevators with twin sheaves.

This also holds true, when used on the more rare elevators with twin sheaves and 2:1 roping. A small undercut in the groove of the sheaves will have no effect on the rope's service life.

Should the traction sheave, whether with full „U" or with a small undercut „U", be of grey cast iron instead of the regularly employed unhardened type, will have no effect whatsoever on the longevity of the rope.

DIEPA S 819 P also presents itself for employment on drum driven elevators.

PAVLÍNEK
VÁZACÍ PROSTŘEDKY
EMAIL: OBCHOD@PAVLINEK.CZ
TEL: +420 595 693 911
ŠALOUNOVA 746/31, OSTRAVA VÍTKOVICE
IČ: 25358511 DIČ: CZ25358511

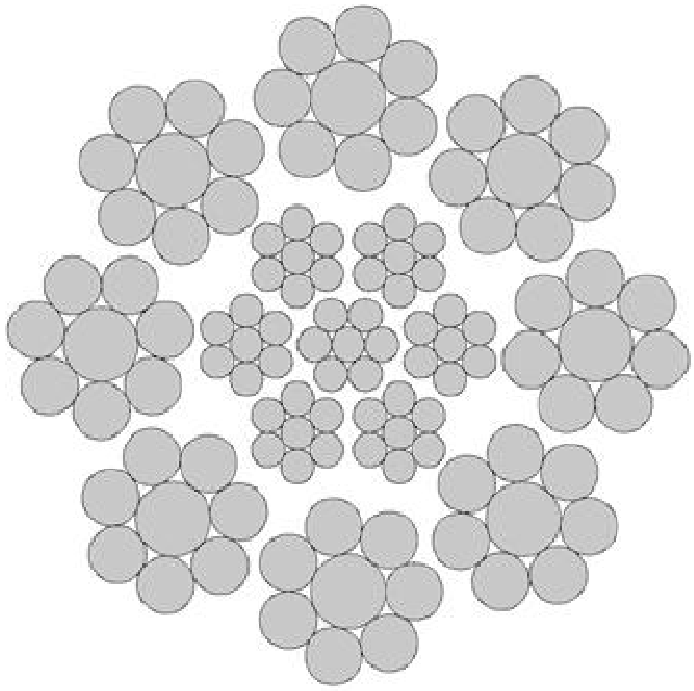

DIEPA **A 139**

Non-rotation resistant special wire rope
in ordinary lay construction

DIEPA **A 139** is highly suitable for:

elevators driven by grooved traction sheaves

hydraulic elevators

Filling factor:	0,6340
Spinning factor:	0,8400
Total number of wires:	113
Number of load bearing wires in the outer strands:	64

DIEPA **A 139**

Diameter	**Metall. Cross Section**	**Weight**	Calculated breaking load 1570 / 1770 N/mm²		Minimum breaking load 1570 / 1770 N/mm²	
mm	mm²	kg/100m	kN	kp	kN	kp
6	17,9	16	28,0	2850	23,1	2350
7	24,4	22	38,3	3900	31,9	3250
8	31,9	29	50,0	5100	41,7	4250
9	40,3	36	63,3	6450	53,0	5400
10	49,8	45	78,5	8000	65,7	6700
11	60,3	54	94,7	9650	79,5	8100
12	71,7	65	113	11500	94,7	9650
13	84,2	76	132	13500	111	11300
14	97,6	88	154	15650	129	13100
15	112,0	101	176	17950	148	15050
16	127,5	115	201	20450	168	17150
17	143,9	130	227	23100	190	19400
18	161,3	145	254	25900	213	21750
19	179,8	162	283	28850	237	24200
20	199,2	179	314	32000	263	26850

Maximum allowable tolerance of the rope diameter +2%

DIEPA **A 139** is normally produced in right- and lefthanded lay, bright wire and galvanized.

Of course the production of ropes with diameters not listed in the table above is possible.

Please contact us for other tensile strength.

PAVLÍNEK
VÁZACÍ PROSTŘEDKY
EMAIL: OBCHOD@PAVLINEK.CZ
TEL: +420 595 693 911
ŠALOUNOVA 746/31, OSTRAVA VÍTKOVICE
IČ: 25358511 DIČ: CZ25358511

Elevators driven by grooved traction sheaves

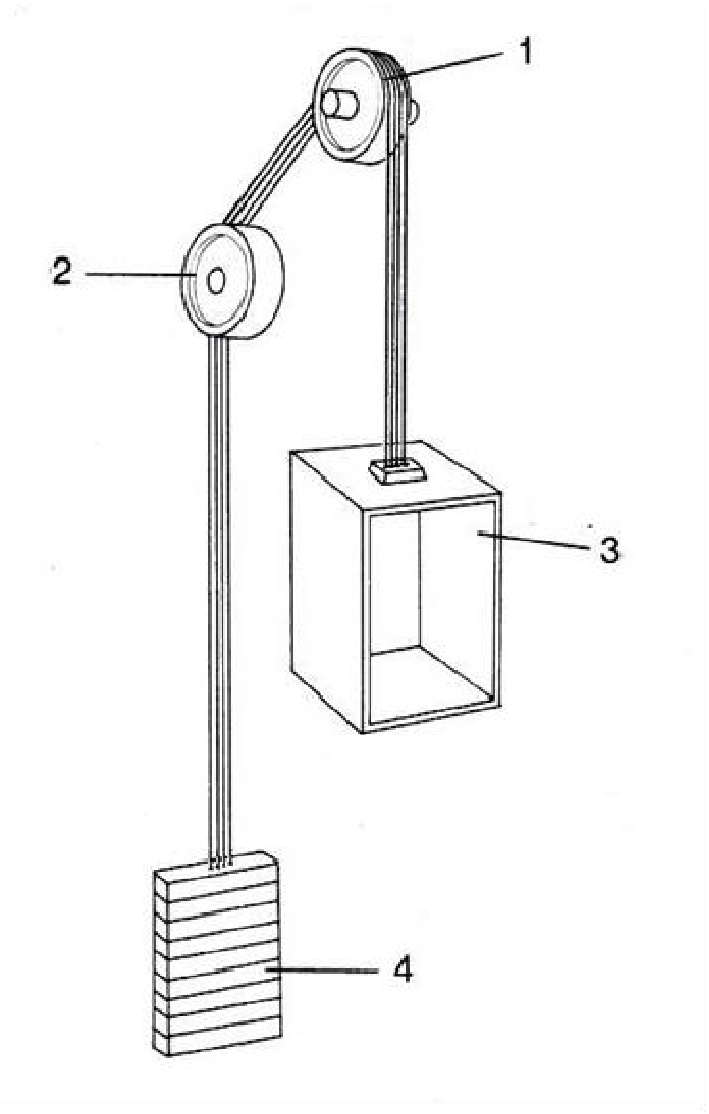

1 traction sheave
2 guiding sheave
3 car
4 counterweight

PAVLÍNEK
VÁZACÍ PROSTŘEDKY
EMAIL: OBCHOD@PAVLINEK.CZ
TEL: +420 595 693 911
ŠALOUNOVA 746/31, OSTRAVA VÍTKOVICE
IČ: 25358511 DIČ: CZ25358511

DIEPA **A 106** / DIEPA **A 160**

Non-rotation resistant special wire rope in ordinary lay construction (regulator rope)

DIEPA **A 106**				
Diameter mm	**Metall. Cross Section** mm²	**Weight** kg/100m	Calculated breaking load **1770 N/mm²** kN	Minimum breaking load **1770 N/mm²** kN
4	9,0	8,6	15,9	13,4
5	12,8	12,2	22,6	19,0
6	16,6	15,7	29,2	24,5
6,5	20,4	18,0	35,3	29,7

DIEPA **A 160**				
Diameter mm	**Metall. Cross Section** mm²	**Weight** kg/100m	Calculated breaking load **1770 N/mm²** kN	Minimum breaking load **1770 N/mm²** kN
7	24,6	23,5	43,4	36,5
8	30,2	29,0	53,3	44,8
9	40,4	38,5	71,3	59,9
10	48,8	46,0	86,1	72,3
11	61,6	58,5	109	91,6
12	69,1	65,5	122	102
13	80,1	76,0	138	116
14	94,4	89,0	158	133
15	106,7	101,0	185	155
16	123,3	117,0	216	181

DIEPA **A 106**

Diameter	4 mm	5 mm	6 – 6,5mm
Total number of wires	86	95	106
Number of load bearing wires in the outer strands	48	56	63
Filling factor		0,6519	
Spinning factor		0,8400	

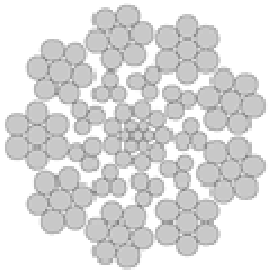

DIEPA **A 160**

Diameter	7 – 16 mm
Total number of wires	160
Number of load bearing wires in the outer strands	72
Filling factor	0,6200
Spinning factor	0,8200

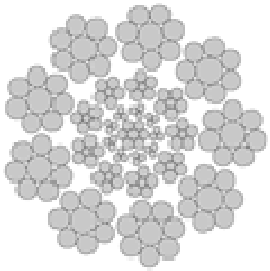

PAVLÍNEK
VÁZACÍ PROSTŘEDKY
EMAIL: OBCHOD@PAVLINEK.CZ
TEL: +420 595 693 911
ŠALOUNOVA 746/31, OSTRAVA VÍTKOVICE
IČ: 25358511 DIČ: CZ25358511

Notes:

PAVLÍNEK
VÁZACÍ PROSTŘEDKY
EMAIL: OBCHOD@PAVLINEK.CZ
TEL: +420 595 693 911
ŠALOUNOVA 746/31, OSTRAVA VÍTKOVICE
IČ: 25358511 DIČ: CZ25358511

PAVLÍNEK
VÁZACÍ PROSTŘEDKY
EMAIL: OBCHOD@PAVLINEK.CZ
TEL: +420 595 693 911
ŠALOUNOVA 746/31, OSTRAVA VÍTKOVICE
IČ: 25358511 DIČ: CZ25358511

DIEPA
Drahtseilwerk Dietz
GmbH & Co. KG

Damaschkestraße 30
D-96465 Neustadt bei Coburg

Telefon +49 (0) 9568 924-0
Telefax +49 (0) 9568 924-101
E-Mail info@diepa.de
Internet www.diepa.de

Reproduction, in whole or in part, only with reference to DIEPA.
02/2017